PARTS LIST		
OBJEKT	ANZAHL	BAUTEILNUMMER
1	1	PW100001389
2	1	THF400003070
3	1	HT100001388
4	2	SP100001389
5	2	B65513J0000R049/ EPCOS-TDK

1. Place PW100001389 carefully on a soft, heat resistant surface.
2. Remove protective foil from THF400003070 and tack it aligned to PW100001389 outline.
Align left hand side borders (away from the inductor)
3. Apply hot air stream (180°C) to THF400003070 until it becomes sticky (1 min).
4. Quickly place HT100001389 aligned on top of THF400003070.
5. Apply hot air stream (180°C) evenly distributed to HT100001388 for approx. 5 min.
6. Carefully apply distributed pressure to HT100001389 while applying heat (use silicon-rubber tool handles)
7. Let assembly rest until it has cooled down/ adhesive has cured

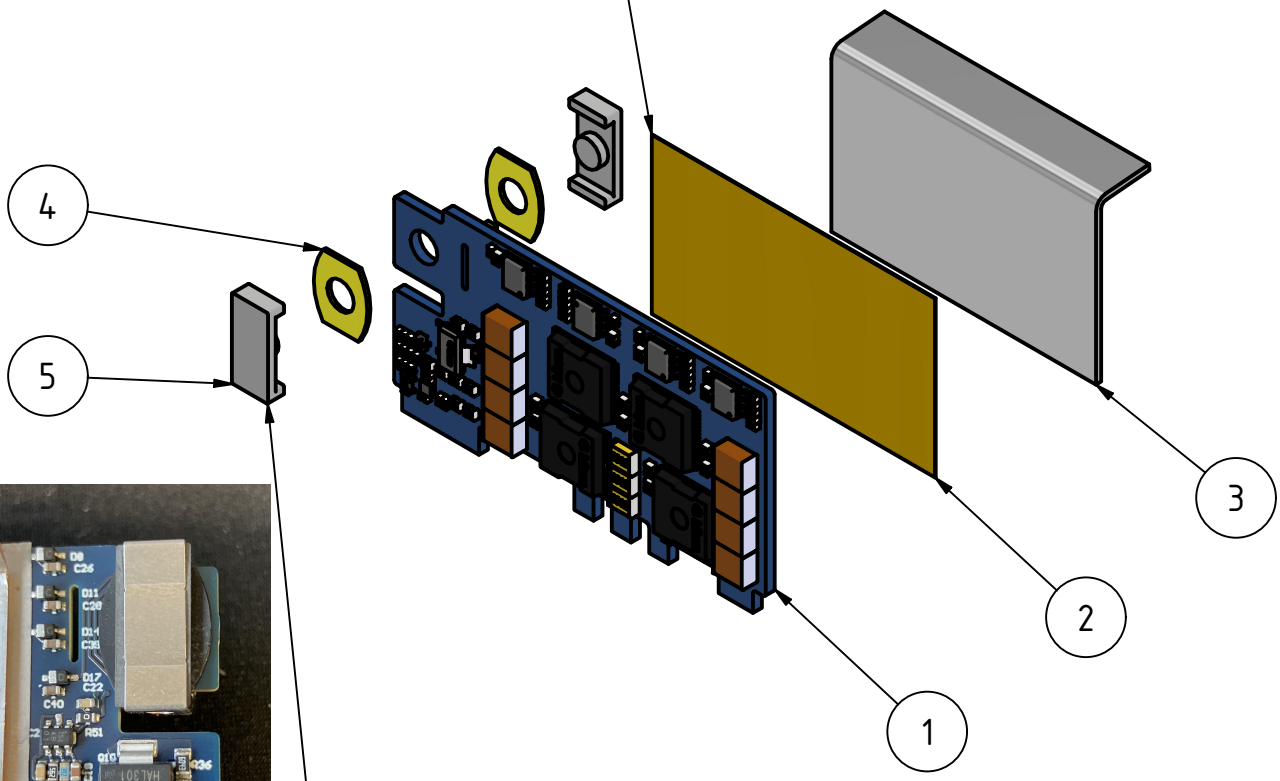

Secure ferrite cores with B65514A2000X000 clip (not pictured).

					Datum	Name
				Gezeich	29.04.2025	Wernegger
				Kontroll		
				Norm		
				PW100001389		1
						A4
Status	Änderungen	Datum	Name			

PARTS LIST		
ITEM	QTY	PART NUMBER
1	1	THF400003070

Material: BOYD PC03MT100

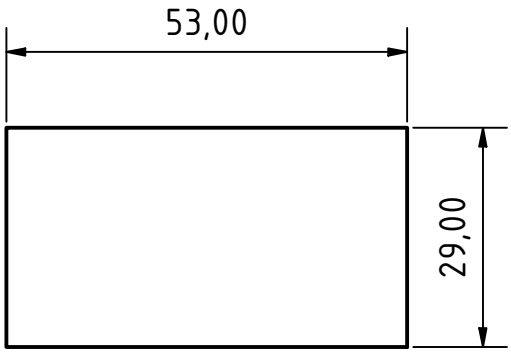

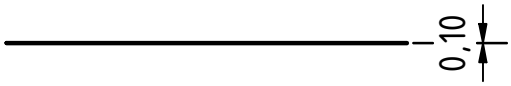

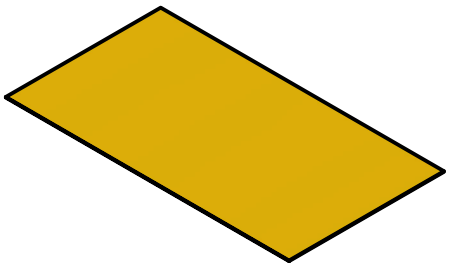

					Date	Name
				Drawn	29.04.2025	Wernegger
				Checked		
				Standard		

State	Changes	Date	Name

PW100001389

2

A4

PARTS LIST		
OBJEKT	ANZAHL	BAUTEILNUMMER
1	1	HT100001388

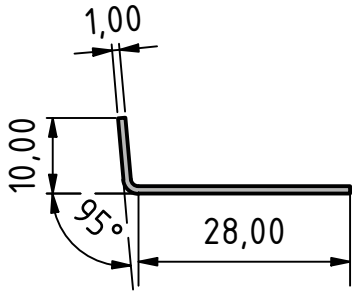

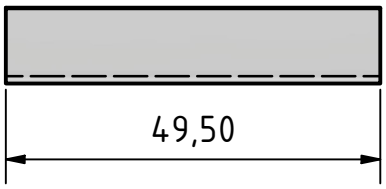

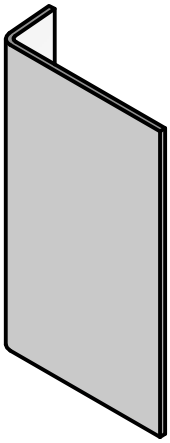

					Datum	Name
				Gezeich	29.04.2025	Wernegger
				Kontroll		
				Norm		

PW100001389

3

A4

Status	Änderungen	Datum	Name

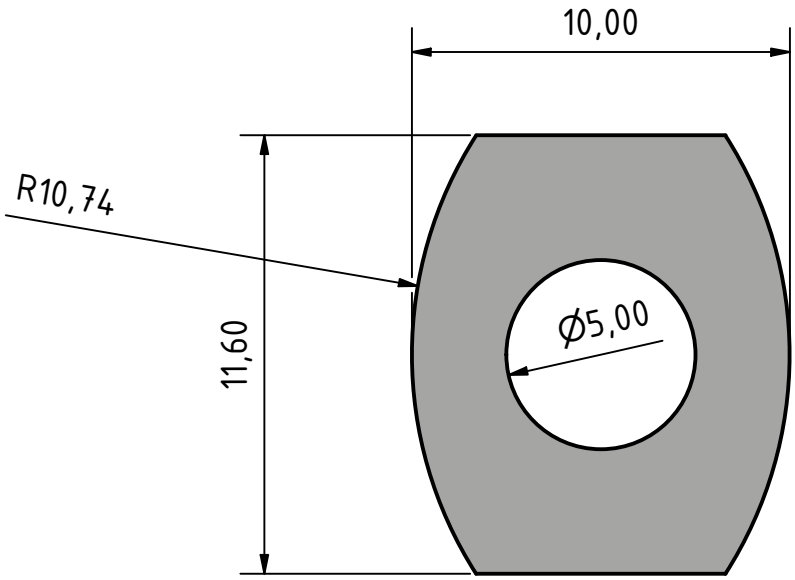

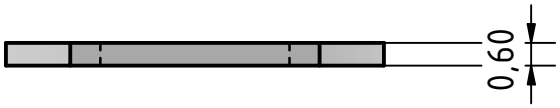

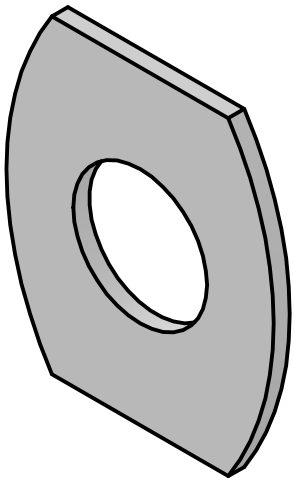

Material: FR4

	Datum	Name
Gezeich	29.04.2025	Wernegger
Kontroll		
Norm		

SP100001389

PW100001389

4

A4

Status	Änderungen	Datum	Name